Technical manual

ELERIX SOLAR PANEL

Mono Half Cut Crystalline Solar Module
410Wp White

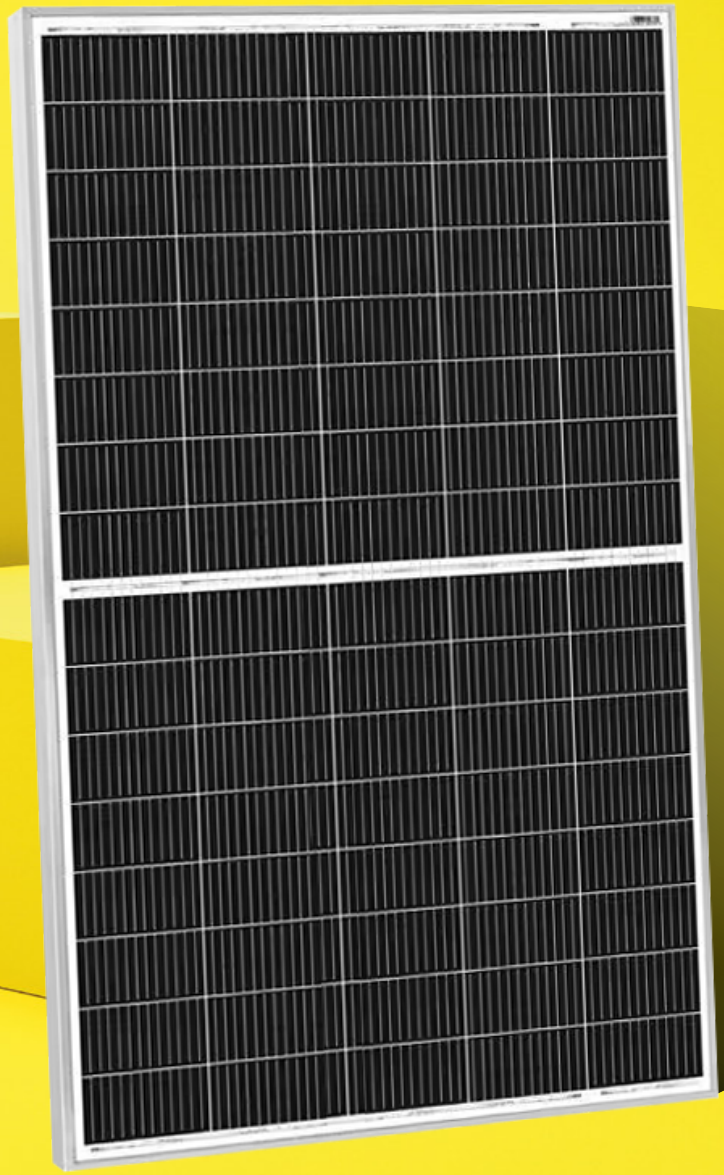

www.elerix.com

PRODUCT WEBPAGE >

EXS-410MHC-W

ELERIX SOLAR PANEL

Mono Half Cut Crystalline Solar Module
410Wp White

ELERIX Mono Half Cut Crystalline Solar Module 410Wp

Key Features

- Excellent module efficiency up to: 21.4%
- IP68 junction box for long-term weather endurance
- Heavy snow load up to 5400 Pa, wind load up to 3600 Pa
- PID: Selected material and stringent quality system ensure PID free
- Applicable to harsh environment of deserts, farmlands and seasides
- Much lower risk of Hot Spot

Warranty

30 years

Linear power output warranty

- 12 years minimum 92% power output
- 30 years minimum 83% power output

12 years

Product warranty on materials and workmanship
According to the applicable ELERIX Limited Warranty Statement

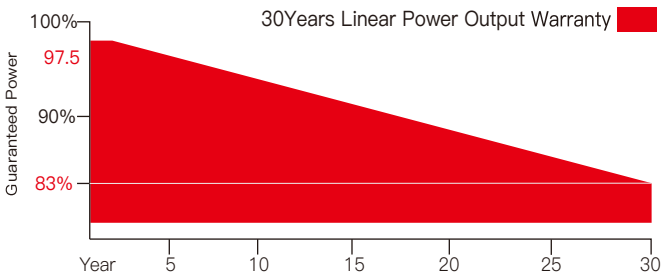

From the 2nd year to the 30th year,the average annual power decline will be no more than 0.5%.

Certification

ELERIX SOLAR PANEL

Mono Half Cut Crystalline Solar Module
410Wp White

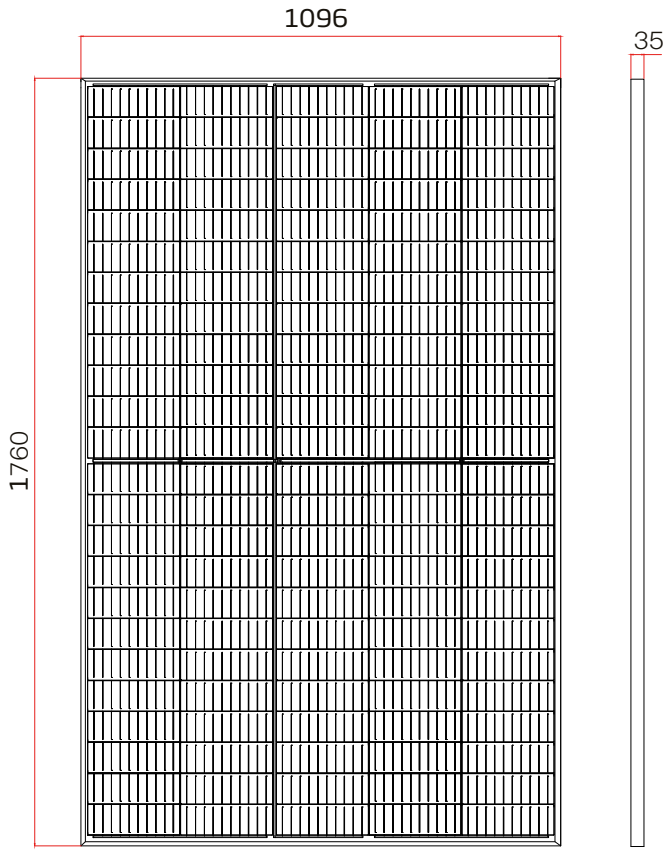

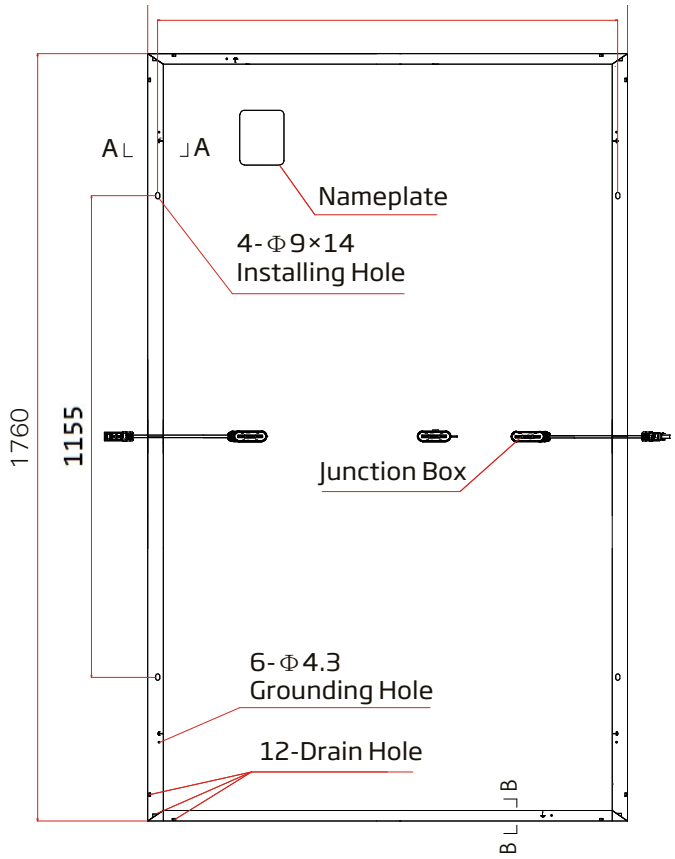

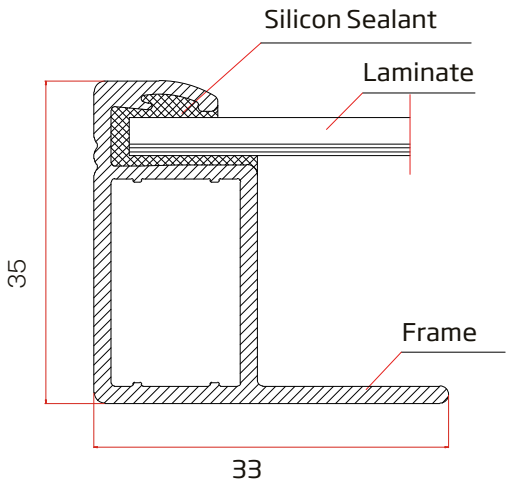

A-A

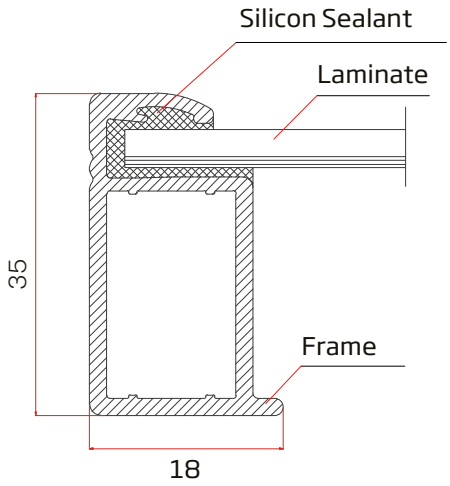

B-B

ELERIX SOLAR PANEL

Mono Half Cut Crystalline Solar Module
410Wp White

I-V CURVES OF PV MODULE(410 W)

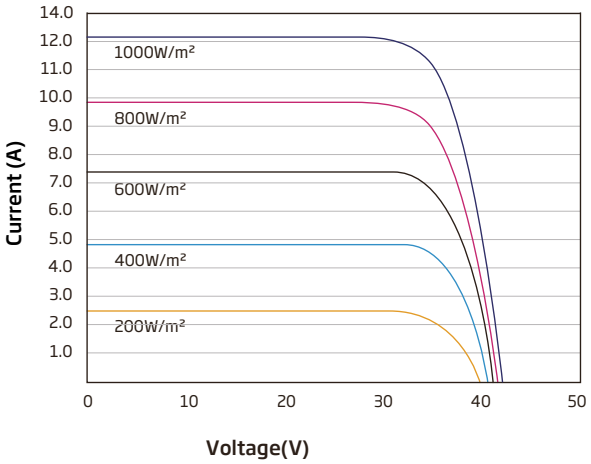

Electrical Specification	EXS-410MHC-W
Maximum Power (Pmax)	410 W
Module Efficiency	21.40%
Open Circuit Voltage (Voc)	41.60V
Short Circuit Current (Isc)	12.40A
Maximum Power Voltage (Vmp)	34.60V
Maximum Power Current (Imp)	11.84A
Maximum System Voltage	ICE 1000 VDC

STC: Irradiance: 100W/m², Module Tempreature: 25°C, Air Mass: 1.5

ELERIX SOLAR PANEL

Mono Half Cut Crystalline Solar Module
410Wp White

DATA	**EXS-410MHC-W**
Pmax [W]	310
Vm [V]	32.80
Imp [A]	9.45
Voc [V]	39.10
Isc [A]	10.00

NOCT: Irradiance: 800W/m^2, Ambient Temperature: 20°C, Air Mass: 1.5, Wind Speed: 1m/s

Mechanical Specification	
Solar Cell Type	Monocrystalline 210"
Number of Cells	120pcs /3x40
Module Size	1760x1096x35mm
Weight	21.0kg
Glass	3.2mm tempered glass
Back Sheet	White
Frame	Anodized aluminium alloy, silver or black
Junction Box	IP68,three diodes
Quantity of Diodes	3pcs
Cable	4.0mm^2 1000mm
Connector	MC4 Compatible
Wind/Snow Load	2400pa/5400pa

ELERIX SOLAR PANEL

Mono Half Cut Crystalline Solar Module
410Wp White

Packaging Configuration	
Modules per box	28/30/36 pieces
Number per 20GP	432 pieces
Modules per 40’ HQ	936 pieces

Temperature Characteristic	
NMOT (Nominal Module Operating Temperature)	45°C (±2°C)
Temperature Coefficient of P_{MAX}	- 0.36%/°C
Temperature Coefficient of U_{OC}	- 0.26%/°C
Temperature Coefficient of I_{SC}	0.04%/°C

Maximum Ratings	
Operational Temperature	-40 to +85°C
Maximum System Voltage	1500V DC (IEC)
Max Series Fuse Rating	30A
Protection Class	Class II
Snow Load	5400 Pa
Wind Load	2400 Pa
Hailstone Test	25mm Hailstone at the speed of 23m/s

*design load with safety factor 1.5 (DO NOT connect Fuse in Combiner Box with two or more strings in parallen connection)

Are you interested in more details?

Visit our online presentation.

PRODUCT WEBPAGE >