GWL

Your complete power solutions.

RV ELECTRICAL SYSTEM

7 Questions and answers

INSTALLATION MANUAL

Contents

- Are you replacing the on-board battery in your RV?
- Are you modifying the electrical wiring in your RV?
- Have you started with a more complex renovation?
- Are you getting an RV and you‘re not sure which electrical system to go with?

This article poses all the other important questions for you and answers them in such a way so as to take you along on a journey of one RV renovation. It explains why it was carried out in this particular manner and will also explain how it could have been done differently. The aim of the article is that once you read it, you‘ll be able to build a functional and safe electrical system in a standard RV with the help of an electrician. The goal of the article, however, is not to explain the various norms for installing the electrical features used or how to go about getting the certification needed for the entire RV renovation in individual instances and countries. You‘ll also find out a little bit about how it all worked in practice on trips throughout Europe. But now let‘s get to the important questions, to which you should have the answers before you start designing your system:

These boxes show you the various technical solutions used in our trial renovation. Here is a view of the interior. The other photo on this page is our RV once the renovation was complete. The owners tried and tested everything on a trip spanning about 10 000 kilometers before we finished the article.

1.

What type of power connection to choose?

If you're counting on being connected to shore power, the wiring will mainly run through AC 230V sockets and lights (alternating current). An alternative to shore power could be a generator or a battery with a DC (direct current) 12V/AC 230V inverter, which you're most likely to connect short-term at the input instead of a connection. The electrical wiring and electrical appliances will then be the same or similar to those you have at home.

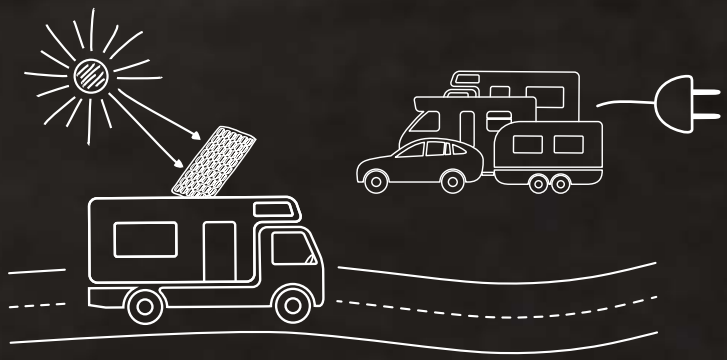

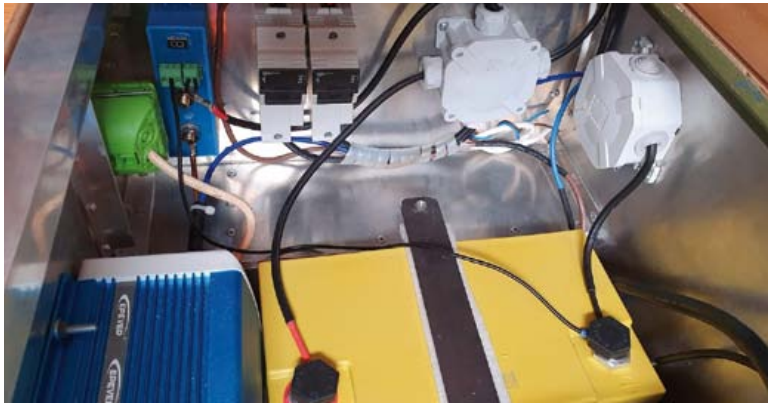

Basic diagram for a blok 12V installation and its execution

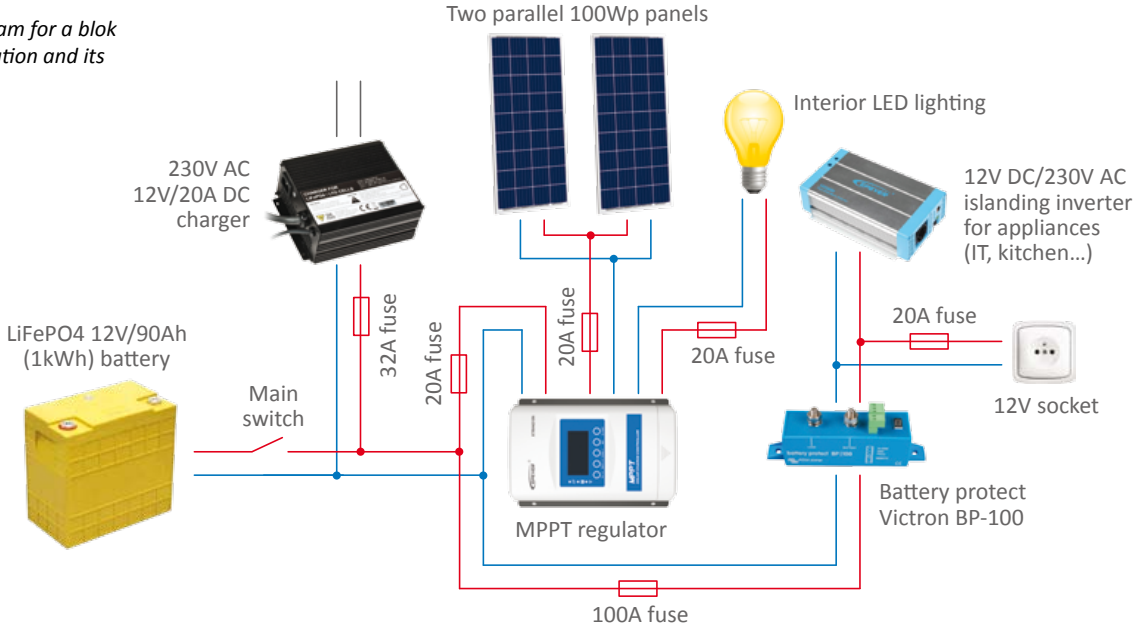

If you wish to be energetically independent as much as possible, select such wiring and appliances so that you don't need to carry out the conversion from DC 12V to AC 230V (and then back again in some cases). The entire system will then be created within a DC 12V system where standardized sockets and appliances are available. The DC/AC inverter with a standard IEC/Schuko socket can then be used only for one 230V appliance connected with a cable. The DC and AC systems can of course be combined or you can even have them alongside one another in the RV.

Our RV will set out on an expedition to far-off hidden corners of Europe where it cannot count on many 230V power plugs. The goal was to reach the highest level of independence. This is why we selected a system of 12V appliances with several sources for charging the battery and with one 230V socket on an inverter designated for plugging in various portable appliances as needed.

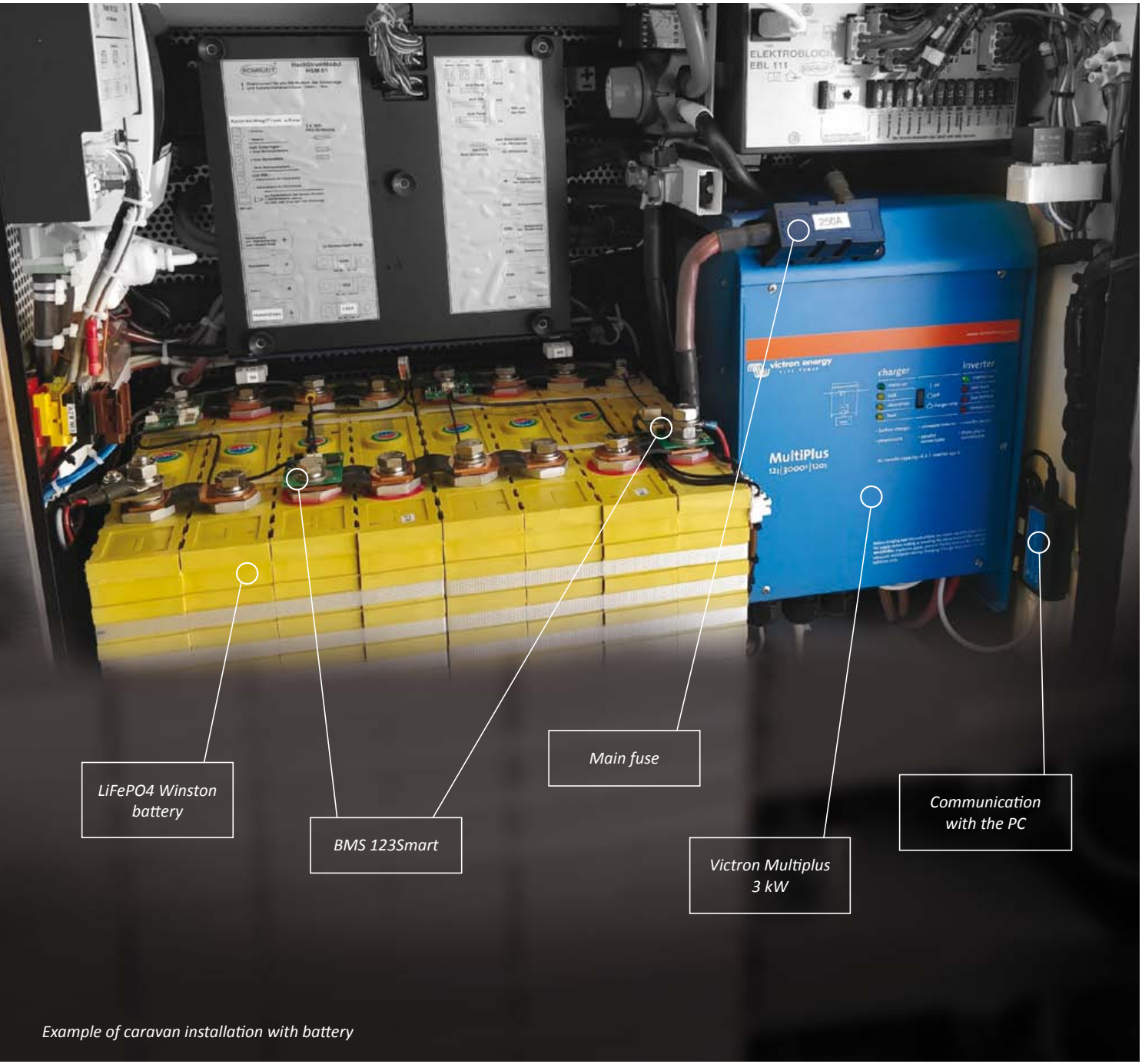

Example of caravan installation with battery

2.

Is it better to select a simple or a sophisticated system?

To understand and operate the system, you will learn all about the basic system components and the way it works to the best of your abilities. You'll learn to read all the necessary data from the bar graphs and the numerical values on the display inside the RV. Based on this knowledge and experience, you yourself will be able to determine what electrical wiring to use and what you need to do. The automatic system functions will then only be limited to e.g. protecting the battery from dangerous statuses, or overloading the circuits etc... If you're technically savvy, you'll be able to identify a defect (a defective part) and carry out repairs or a replacement with the assistance of an online professional. This applies mainly for systems with safe 12V voltage.

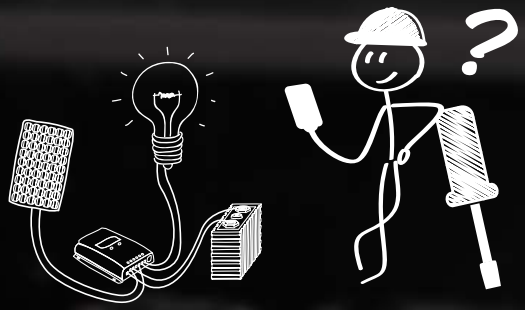

A block diagram of the wiring in the RV that is being described

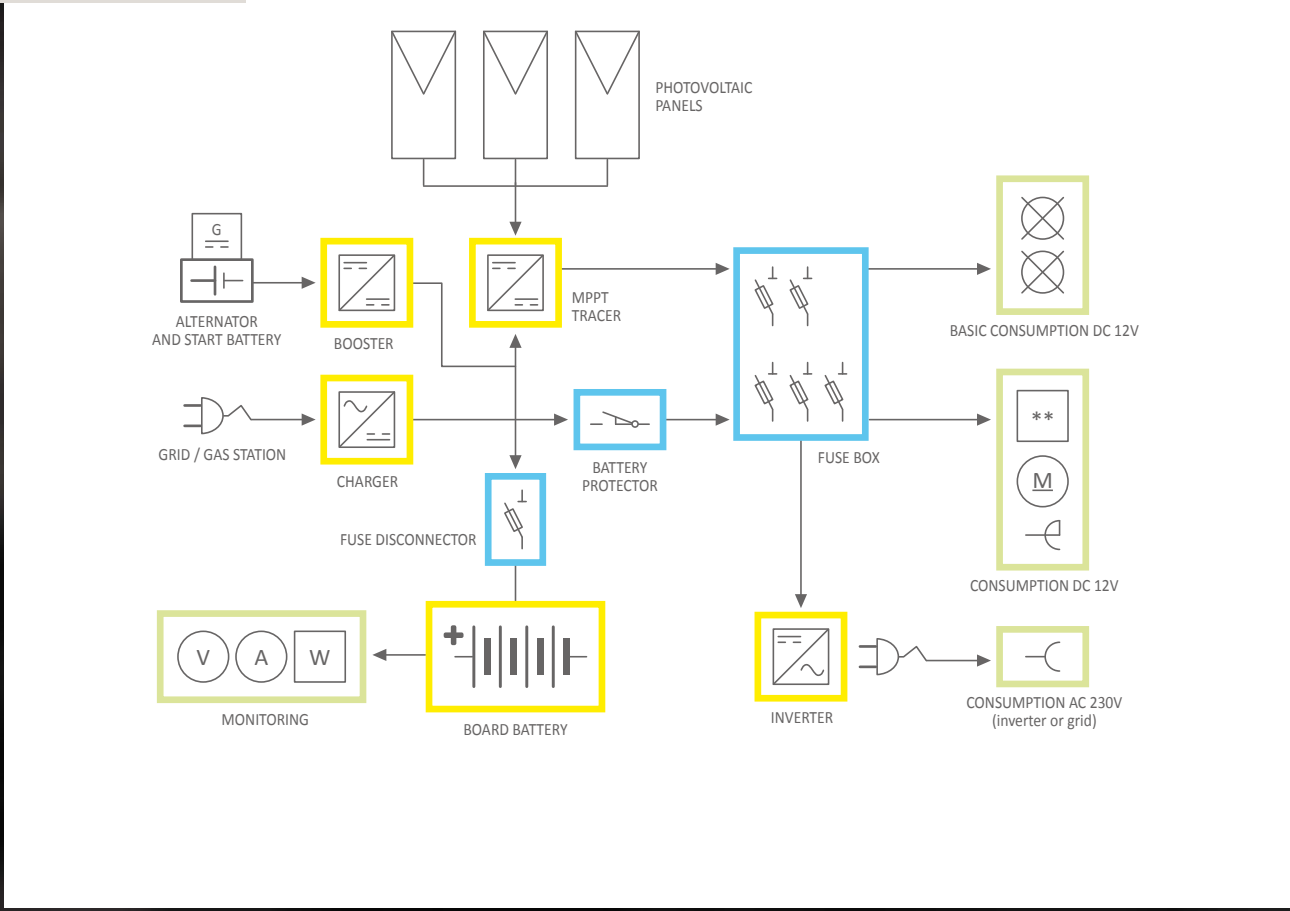

The RV can also be turned into a „smart home“ to a certain extent, so that the system can inform you of everything e.g. using a mobile app with warnings received via text message, using its own touch screen etc. It will carry out most of the activities on your behalf (monitor the weather, limit usage, select the mode for charging the battery and even start up the generator…). This solution will be comfortable, expensive and you will need to leave all service up to a professional in most instances.

Example of a simpler installation for an RV with basic parameters in a wiring diagram

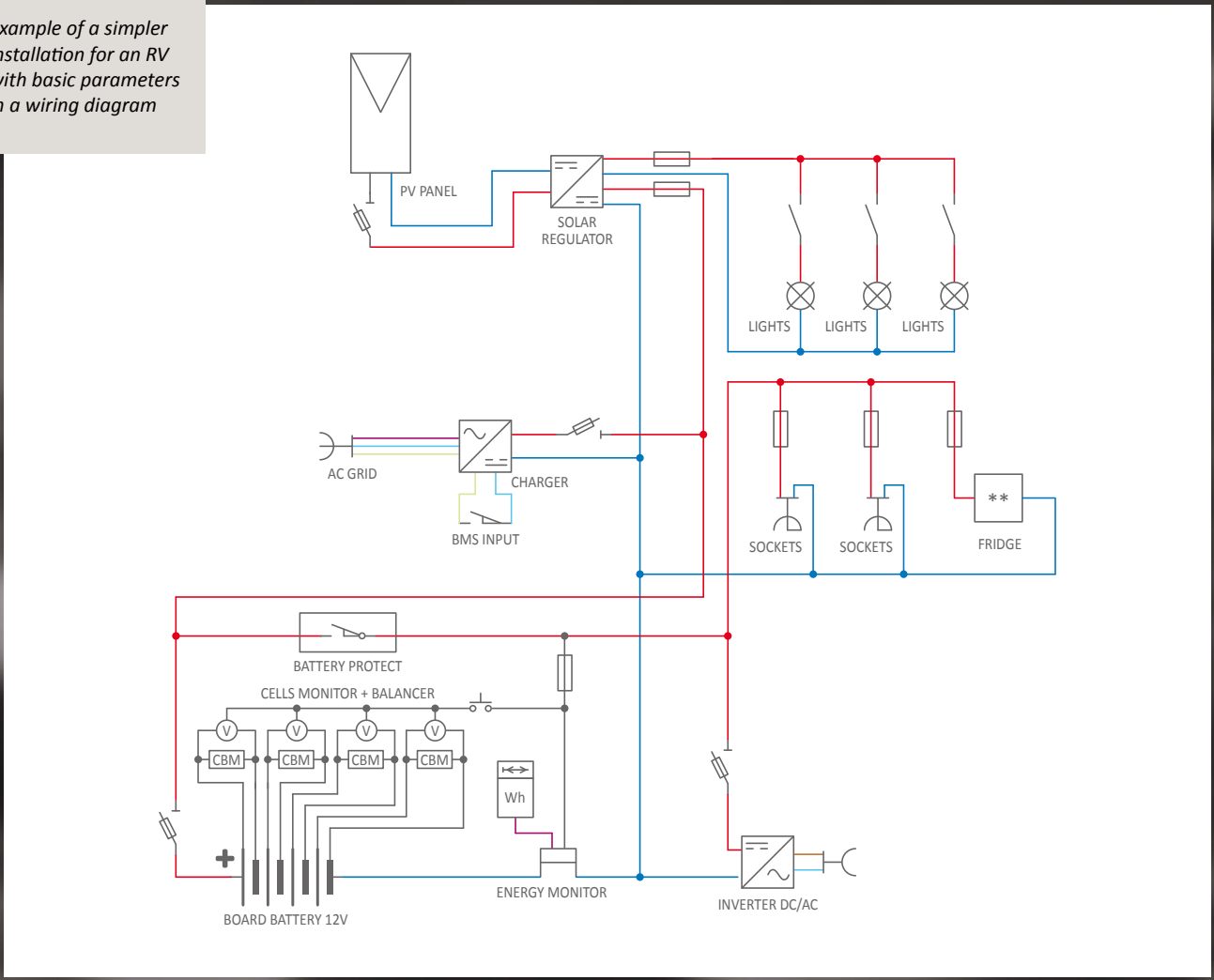

If you have answered these two basic user questions, you'll find the rest of this article useful. All the other questions are of a technical nature and comprise the headings of the following chapters. Once you read them, it is up to you whether you decide to start with an installation on your own or if you decide to hire a professional company and explain to them exactly what you want and don't want.

A wiring diagram of the executed installation

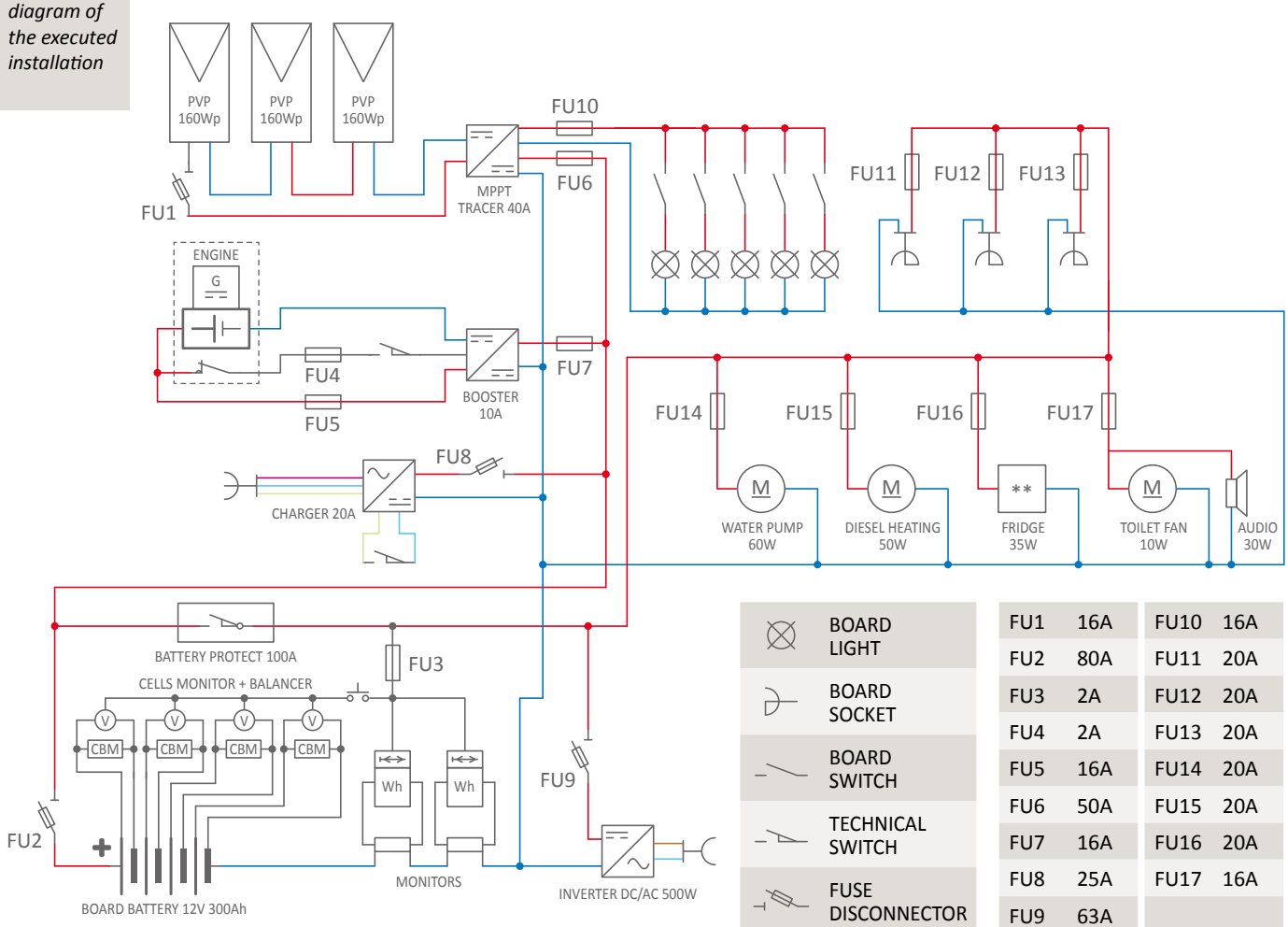

	BOARD LIGHT
	BOARD SOCKET
	BOARD SWITCH
	TECHNICAL SWITCH
	FUSE DISCONNECTOR

FU1	16A	FU10	16A
FU2	80A	FU11	20A
FU3	2A	FU12	20A
FU4	2A	FU13	20A
FU5	16A	FU14	20A
FU6	50A	FU15	20A
FU7	16A	FU16	20A
FU8	25A	FU17	16A
FU9	63A		

We've selected a DC 12V system that is as independent as possible. The user doesn't want to be dependent on a service company, if possible. He has no electrotechnical qualifications but is willing (and able) to learn about the system and operate it fully.

You basically just need electrotechnical skills learned in elementary school. This is why we've decided on a simple system built from easily-replaceable and available components, operated manually based on information displayed.

3.

Which photovoltaic panels to use and how and where to install them?

Panels on a roof installed horizontally usually do not reach 100% of performance but have a long and flat production rate during the summer, which is advantageous for basic energy production. Placing them on a slanted part of the RV will usually mean unpredictable effects from change of direction, shading etc. Generally speaking, this solution is more effective but with a shorter sunlight period.

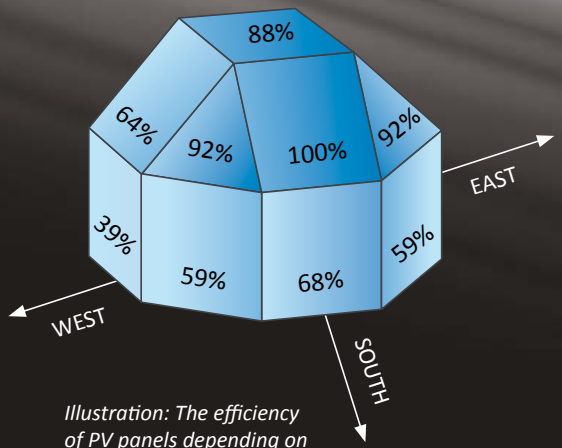

Illustration: The efficiency of PV panels depending on the direction they are facing

Example of how flexi panels are used

FLEXI PANELS

Frameless flexi panels may be used on RVs. Their advantage is their flexibility in shape (which is limited!) as well as their fairly simple installation and minimum overhang over the edge of the RV. It is also usually necessary to provide ventilation of the lower area of the panel and to eliminate the varying expandability of the panel and the base. It is advisable to use e.g. an in-between layer made of durable Makrolon polycarbonate.

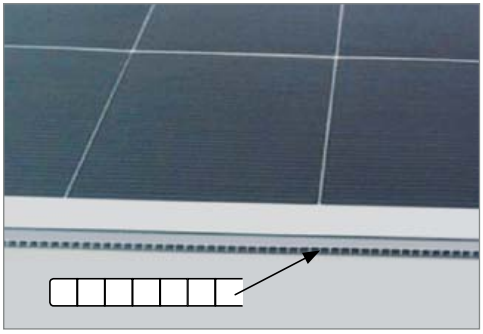

The underlay of a flexible panel

Our RV with panels on a mounted structure

OR STANDARD NON-FLEXIBLE PANELS

Classic panels with a frame can be attached to an RV roof very easily. The advantage is a wide selection of shapes and power levels and their better price. The disadvantage is their worse aerodynamic properties. Corner hooks are e.g. made to attach these panels to a flat surface. There are also many different Al profiles, which can be attached to the RV roof and used for the subsequent installation of the panels.

We were able to use a space of about 140x200cm on the roof in our renovation. We therefore used 3 classic 160Wp panels with an aluminium frame measuring 140x65cm. We used aluminium profiles, which were initially designated for roof trapeze metal sheets, to attach them. We stored those into a sealant and attachem them with screws into threaded rivets.

4.

What battery to choose and where and how to install it?

We should not consider a start-up car battery in a serious installation – it does not have a suitable realistic capacity, efficiency or lifespan. We've therefore selected a LiFePO4 dashboard battery, which best meets all the requirements for safety, reliability and economics. If the requirements for longevity and power were higher, we would go with LTO (Lithium Titanate Oxid) technology. We discuss the process of choosing a correct chemical composition in the „How To Operate a LiFePO4 Battery" article.

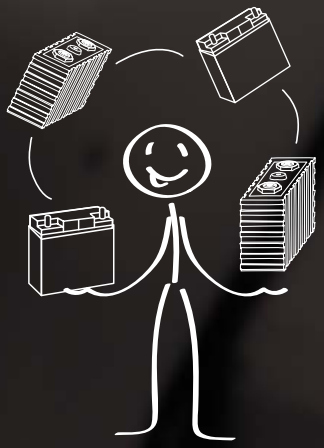

IT IS IMPORTANT TO CONSIDER THE FOLLOWING CRITERIA WHEN CHOOSING A SPECIFIC TYPE OF BATTERY AND CAPACITY:

- Usage of the electricity in daily cycles as well as cycles spanning several days
- The option to connect from other power sources (car alternator, generator, grid…)
- Lifespan of the battery (number of cycles, depth of discharge…)
- Space and weight limit, which we have for the battery
- Output from PV panels in daily cycles as well as cycles spanning several days
- Maximum input from the electrical wiring (battery current load)

CALCULATION OF WATTAGE AND CONSUMPTION OF OUR RV

Circuit	Appliance	Wattage (W)	Duration (Hours)	Consumption (Wh)	Note
FU10	LED strip 1	11,0	4	44,0	Auxiliary lights
	LED strip 2	9,0	4	36,0	Auxiliary lights
	LED spot	6,0	2	12,0	Above the table
	LED strip 3	4,0	2	8,0	Kitchen
	LED spot	6,0	2	12,0	Entry
FU11	Socket 12V + 2x USB	20,0	4	80,0	Laptop
	Socket 12V	200,0	1	200,0	Heating up food
FU12	Socket 12V + 2x USB	8,0	2	16,0	Mobile, wifi hotspot
FU13	Socket 12V + 2x USB	20,0	4	80,0	Laptop
	Socket 12V + 2x USB	8,0	2	16,0	Mobile phones
FU14	Pump	25,0	1	25,0	Sink faucet
FU15	El. circuits for heating	22,0	3	66,0	Naftové topení Webasto oil heater
FU16	Refrigerator	8,0	24	192,0	Volume
FU17	Ventilator + LED WC	12,0	2	24,0	Timer
	Audio	50,0	3	150,0	Add-on dashboard set
FU9	Appliances	500,0	0,2	100,0	El. equipment, portable light
Systém	System Own Consumption	10,0	24	240,0	Equipment, display, indicator lights
Total		**919,0**		**1 301,0**	

Various types of LiFEPO4 batteries

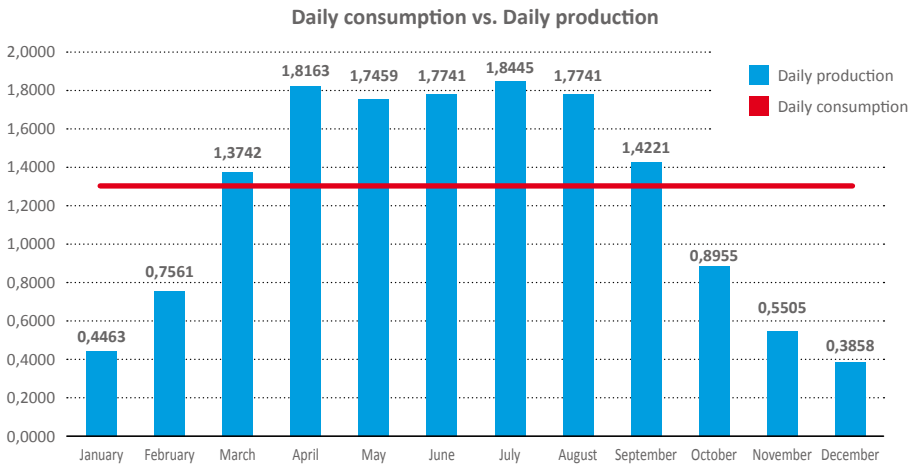

Graph: Self-sufficiency calculation of our RV from the photovoltaic system (horizontal PV field of 480Wp, Central Europe)

The bigger the reserve in capacity we add in after the calculation, the better (unexpected events, expansion of the installation, low temperatures…). The battery should be placed in a safe location where it will be protected from mechanical damage during an accident as well as from extreme temperatures, water damage, dust, insects and rodents. It is also better to protect the battery from physical damage and prevent the cells from swelling due to an unintentional emergency situation (overcharging, electronic damage, etc.). Individual cells should be attached to the whole unit and original connectors and terminal covers should be used to connect them. It is best to use a typified box or at least a tightening set, and then place and attach the battery into a space that can be closed off.

Based on the listed calculations, we've decided on a battery built from four LiFePO4 300Ah cells in our trial installation. We therefore have a supply of 3.6kWh, which gives us three fully self-sufficient days in an emergency. In normal summer mode, we can expect full coverage of the daily needs from the photovoltaic panels during the day cycle, partially directly. The battery daily cycle will then only be 0.5 to 0.8kWh so we have ample reserves to expand consumption or to cover an unexpected random need for energy etc.

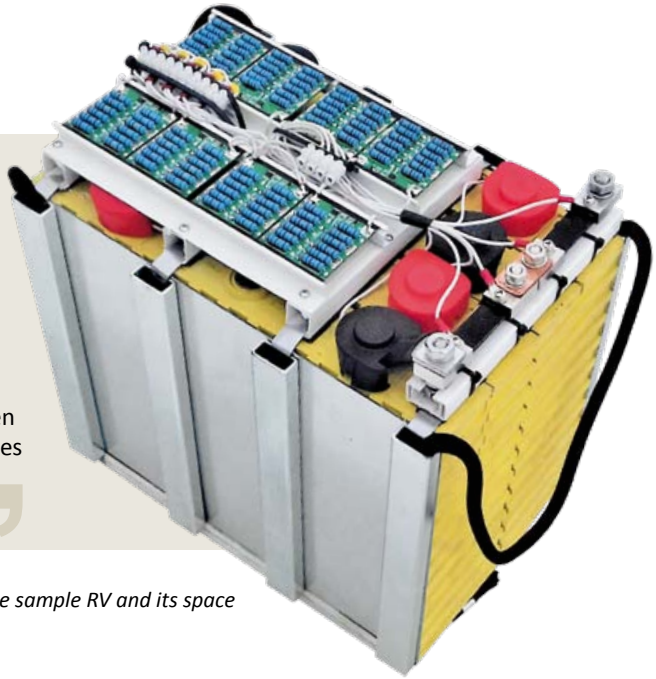

The set-up for the sample RV and its space

5.

What other **components** will I need?

A SOLAR REGULATOR – WHICH ONE AND WHY DO WE NEED IT?

The regulator adjusts the PV panel voltage to voltage needed to charge the battery and it also regulates the charge current. It usually also works as protection from battery discharge using its LOAD clips (suitable for low, non-inductive loads). The PWM regulator may be used if the panel voltage is slightly higher than the battery's voltage as well as for small wattage, since this type of regulator will only reduce PV panel voltage. Otherwise, it is necessary to use the MPPT type regulator, which searches for the most optimal ratio between voltage and current at any panel power whereby it reaches up to 30% higher effectiveness of charge than PWM regulators. The listed current load of the regulator must always be considered on the battery current level not the PV panel level.

We used the MPPT 40A regulator in our installation (480Wp / 12V = 40A). We connected only the light circuits into the LOAD clips since they have a low wattage requirement. We charge the other appliances with higher current usage directly from the battery via the Battery Protect features from Victron.

MPPT and PWM regulator

Manual booster switch

BOOSTER – ESSENTIAL FOR INDEPENDENCE

A booster ensures that optimal charging power and only a limited amount of current is coming in from the electrical system of the vehicle. The transfer of energy (charging) can be controlled using a switch circuit, which is activated by a running alternator, i.e. when the engine is running. An alternative would be a battery separator (e.g. VE Cyrix), which allows for transfer of energy into the on-board battery automatically once a certain voltage level on the starter battery is reached. The charge current of the on-board battery is then only designated by its internal resistance, which is very low in the case of LiFePO4. The system therefore needs to be designed so that the vehicle alternator is not overloaded, so that the system isn't in a cycle and so that it doesn't collide with the mode for charging the battery by the controlled dashboard computer of the vehicle.

In our installation, this charge source is only designed as an auxiliary and service source. This is why we used the 10A booster, which is activated when the motor is turned on. A switch on the vehicle dashboard has been added to manually turn off charging (during long rides), which is used to deactivate the booster. If the on-board battery is charged the booster decreases the charging current to a value, which the installed passive CBM ballencers can level out (convert into heat). It can therefore be used for service balancing while driving.

Booster and battery separator

Battery protective features

BMS – BATTERY PROTECTIVE AND MONITORING FEATURES

An integral part of operating the LiFePO4 battery is its protective and monitoring properties (BMS – Battery Management System). These usually occur on the level of the voltage of the individual cell and the overall voltage of the battery. More advanced and complex BMS systems monitor the immediate power of sources and appliances as well as the status of the battery charge (SoC - State of Charge). For a small 12V battery (four LiFePO4 cells in a series) we may in certain cases consider a limited management of individual cells only.

Purchase your protective features here

Monitoring batteries in our RV

Monitoring features

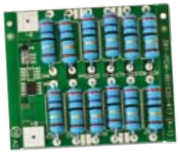

Passive balancer

We used the following solution in our trial installation:
Protection from battery discharge is ensured through regulation of the overall voltage and current on each charging feature (MPPT regulator, booster, network charger). Any potential disbalance in charging the individual cells is eliminated by CBM balancers with a balancing current of 3.4A. Protection of battery discharge during low overall voltage is ensured through internal MPPT logic of the regulator on the LOAD output (it charges the lights).
Sockets and other appliances connected directly to the battery are disconnected prior to discharge using the Victron Battery Protect feature. In addition, some appliances have their own integrated protection against undercharge (DC/AC inverter, pump, refrigerator...). The voltage of the individual cells in the battery is regularly monitored by the user with the help of indicators on the control panel. These are four standard voltmeters activated by a shared control button. If needed, cells can be balanced during service by one of the above-mentioned methods (booster or network charger) and the battery is charged to its maximum voltage (100% SoC).
In this state, the user can bring both the built-in Energy Meters down to zero, where one measures output (energy flowing into the battery) and the other measures consumption (energy drawn from the battery). The user therefore gets an overview on production and consumption and he sees the state of charge as a simple difference between these two values. At the same time, the user has an overview of the overall battery voltage and the charge/discharge current and power.

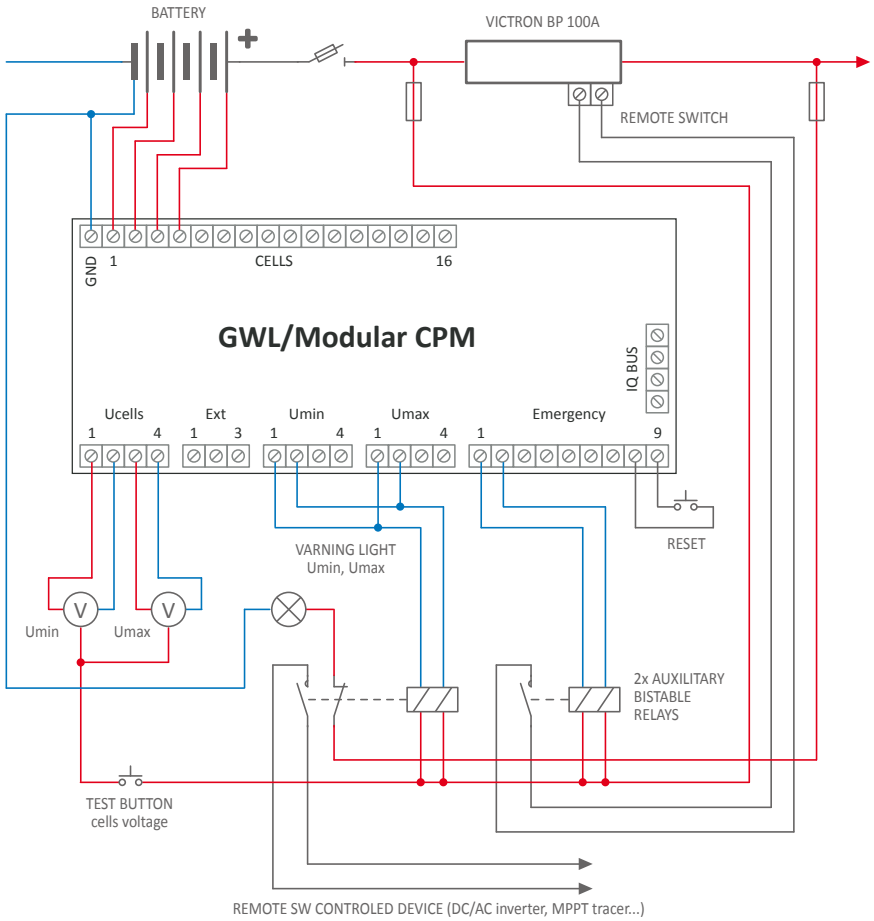

Diagram: Expanding the BMS for individual cells

Note:
The battery state of charge can be measured and displayed using more sophisticated modules such as the Victron BMV-700, for example. A standard BMS contains constant monitoring of every cell with automatic disconnection of any one of them, meaning not only when the overall voltage of the battery becomes critical. A suitable combination is e.g. GWL/Modular CPM and the already-used VE Battery Protect. The CPM module then further allows for using e.g. the emergency indicator for borderline statuses and prioritized disconnection of dispensable appliances – everything is displayed in the expanding diagram.

NETWORK CHARGER – A RELIABLE FRIEND FOR CAMPGROUNDS

When charging from a 230V power source in campgrounds or from a generator, we opt for an on-board charger compatible with the battery used. If the electrical grid is available, there is usually enough time for more economical and slow, or even service (balancing) charging. A network charger can also be used for periodical charging of the batteries off-season (after about 3 months). Its charging power therefore doesn't have to be very high.

A 20V charger with a so-called BMS connector is installed in our RV. It contains three contacts, which can be used to limit the charge current or to stop the charger altogether using a software. We have run these contacts to the dashboard and by switching between them, we can decrease the charging current down to 2A. The charger can therefore be used as a service (balancing) charger in combination with a pair of CBM modules with a maximum balancing current of 3.2A.

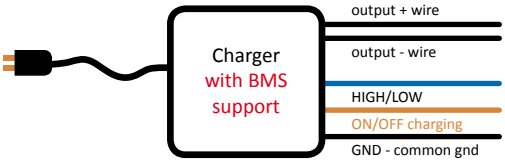

The charger used and a diagram depicting the switch to a balancing current

A DC/AC INVERTER – AN INPUT GATEWAY FOR REGULAR 230V APPLIANCES

If you are building a 230V AC network in your RV, it is always necessary that the installation is supervised (revised) by a person with adequate qualifications. It is necessary to comply with many safety measures, which are valid for the TN-S system and which go above and beyond the scope of this article (loop impedance, adequate short-circuit inverter current, principles of electrical grounding etc…). Using only appliances with double isolation (Class II) helps a bit as does using an AC 230V system, which is limited and simplified to the utmost degree, as we described in the introductory question. In a more complex system, it is necessary to use additional protection against dangerous touch voltage, e.g. a current protector.

We have used a top-quality 500W inverter with integrated protection against undercharge and overload in our renovation. It contains a standard IEC/Schuko 230V socket. We therefore got by without having to build an additional auxiliary 230V network, which would increase demands for the safety features mentioned above. Infrequent use of only one (also of a good quality) appliance in the inverter socket only therefore limits the risk of electrical current accident to a minimum, just like it does at home.

The 500W inverter used

A photo from the installation

SOCKETS, LIGHTS

The use of economical LED light sources, which come either as spot lights or LED strips of various lengths and wattage is a matter of course.

DC 12V and USB sockets are also available in many versions and configurations. Specialized shops offer design panels, which are put together. By buying a suitable fixture of individual components, you'll be able to get the same effect for a fraction of the price.

Spot LED lights and LED strips were used in the renovation using several light switches to reach the desired light intensity in various spaces and modes. Suitable usage then adds to the optimization of consumption. Three socket circuits provide an adequate reserve of power and protection against overload (clash of consumption). We attached the components bought separately into readily-available aluminium panels.

6.

How to connect **everything** together and make it functional?

The main nodes of the entire installation are batteries, the distribution board (fuse box) and the monitoring panel. These parts are usually found in one space that is easily accessible in a small installation. On a 12V voltage level, one must keep the stronger currents in mind and that is why we‘ve made sure to have adequate cross sections and the shortest wire lengths possible – meaning the proximity of the individual nodes – already when we started planning the system.

Photo from the installation

We use color-coded and terminated wires intertwined together protected by tubes along the conduits and duct penetrations, cable sleeves etc. It is important to attach everything to prevent it from being worn down and other damage, which may occur while driving, mainly through vibrations. Every circuit should have its own safety feature, one that can be easily disconnected mechanically. A safe and accessible disconnection of the PV panels and the battery is a must. We always start running the system only when the battery is charged fully and balanced.

We gradually connect the monitoring system and the individual consumption circuits. We monitor values of the voltage and current, heating up connections (an infra camera is useful), wires, equipment etc. Once the battery is partially discharged, we proceed similarly as when testing charging features and setting up their parameters. The limit (emergency) values of BMS protection can be 2.5V and 3.8V per cell (10V – 15.2V for four LiFePO4 batteries). Operating values should be within the 3.0V - 3.5V range per cell (12 - 14V for a four-cell battery).

In our installation, a separate space was created in the safe part of the vehicle for the battery and its BMS superstructure. Close by, there is an accessible place for the distribution board comprising the electrical features located on the DIN connector. The monitoring panel is on the door to the distribution board and the main equipment on the wall of the toilet right next to it. The wiring is stored in the electrical conduits and ducts hidden behind wood paneling.

7.

How to **operate** and **maintain** the system?

PROJECT DESIGN PLANS AND EQUIPMENT MANUALS

It is necessary to set up a space in the RV where all the documents for the user as well as expert service needs will be stored. The electrical wiring diagrams should ideally be placed on the inside of the door to the distribution board etc. If you're ever in need of help from an electrician while on the road, this will be the first thing they'll want to see.

SERVICE PACKAGE, CONTACTS

It is advisable to have extra fuses, isolation tape, binding strips, connecting electrical screw terminals, simple multimeter.
You can resolve some small defects and accidents on your own or with the help of a video call with an expert who will always appreciate technical equipment and any type of training the user has with the system. If you don't have such a „call a friend" option, at least have some contacts handy for a service provider in the given country.

OPERATIONAL MAINTENANCE

It is recommended that you check on the following statues at least once per month (the more often the better):

- Measure the voltage in the individual cells in the battery (and deal with values below 3V and above 3.6V)
- Visually inspect the battery status (whether the wires touch the balancer resistors, loose parts…)
- Check that the PV panels and their frames are attached properly
- Pay attention to unusual overheating of equipment and connections in 12V current circuits (battery terminals, Battery Protect, circuit breakers, inverter, clamps etc.)

POST-SEASON MAINTENANCE

- Charge the battery fully and disconnect it reliably (mechanically) from any loads, ideally store it at room temperature
- Take measurements of the battery, ideally once a month (eliminates potential defects in the balancer and subsequent discharge of the battery through its own consumption - resolve situations where the value is below 3.2V on a cell)
- Protect the wiring against damage by rodents and insects
- Charge the battery fully once every 3 months, charge it and balance the cells before the season starts
- Inspect the overall status of the system before the season starts (ideally carried out by an expert)

SAFETY

- It is advisable to put a smoke detector in the RV, in the space for the battery and near the circuit breakers
- Attach all active electrical features to fire retardant lining, e.g. CEMVIN)
- Have a functional powder fire extinguisher in a visible and easily accessible location
- Protect the battery from mechanical damage
- Prevent children and unauthorized persons from handling the wiring and electrical equipment

And the big question is **- will it all work?**

The completion of the sample renovation collided with the start of the COVID-19 pandemic in the spring of 2020, which resulted in closed borders. The family was eager to hit the road and didn't want to wait. They set out with their RV – which was not completely finished and wasn't tested – from the Czech Republic to their final destination in Portugal. They encountered closed borders (and campgrounds with electricity…) between France and Spain. Choosing an independent and self-sufficient system thus proved to be a suitable decision that worked well. Daily consumption of the RV was about 1kWh and was supplemented only from the PV panels. The RV inhabitants got used to this very quickly and stopped worrying about charging and saving energy. In Normandy, when it was very rainy and after some time spent cooking, heating (running the ventilator on the oil aggregate), watching films on tablets etc....all the lights „suddenly" turned off. The other parts of the installation worked OK, including lights in the sockets. Everyone took notice of the lights turning off, though. „Why did it turn off?" The higher level of disconnection of the load MPPT regulator output for the light circuit proved to be a very useful indicator preventing a total blackout after the other installations were disconnected via the VE Battery Protect. The users were thus able to quickly realize that it's time to start saving energy and get moving so that the battery can at least charge via the alternator and booster. This was the end of March. This situation would not happen in sunny April and May and there's no need to worry about it again until October. The travellers monitored excess of energy on the simple Energy Meters and ended up buying additional small appliances along the way, e.g. an electrical 12V kettle and a vacuum cleaner. Before they learned to divide consumption into several sockets, an overloaded fuse blew out twice. These were the only „complications" on a trip spanning about 6000 kilometers.

> Our technical manual is at the end of its journey so we hope you have found it useful. Our sample RV is also at one of its destinations – this is what the edge of Portugal looks like… We've already written something about boats and technical solutions there are very similar to those found in RVs so maybe next time, we'll take you on board an electric airplane…

In May, the RV returned to the Czech Republic and so we carried out a service inspection and listened to the comments from the users regarding the lit-up USB sockets, which they found disturbing during the night. We've therefore attached a switch to these circuits and once we're able to find sockets without lights it will be easy to replace them. There was nothing to service otherwise, the battery was balanced meticulously, the equipment functional and the owner seemed to understand the system more than we had expected…

In July 2020, the RV set out beyond the borders once again and checked in from Braga in Portugal, stating that all was well. So hopefully, this positive story of one installation is only just beginning.

We wish them happy travels, countless discoveries and great experiences along the way!

GWL

Your complete power solutions.

The right selection of components for your RV, from batteries, solar panels to monitoring and protection features will make use of your RV much simpler, enhancing your overall travel experience. LiFePO4 batteries offer enormous advantages as compared to Lead batteries, the right choice of panels will improve not only the appearance of your RV but also your self-sufficiency. A small investment into understanding the installed features will make you completely independent from suppliers of components and will put your mind at ease over how to run everything.

To keep up with our offers, latest news, manuals and tricks, follow us on:

GWL Power @GWLPower GWLPower GWL Power

GWL a.s., Průmyslová 11, 102 19 Prague 10, Czech republic
e-mail: sales@gwl.eu, phone: +420 277 007 500

www.gwl.eu